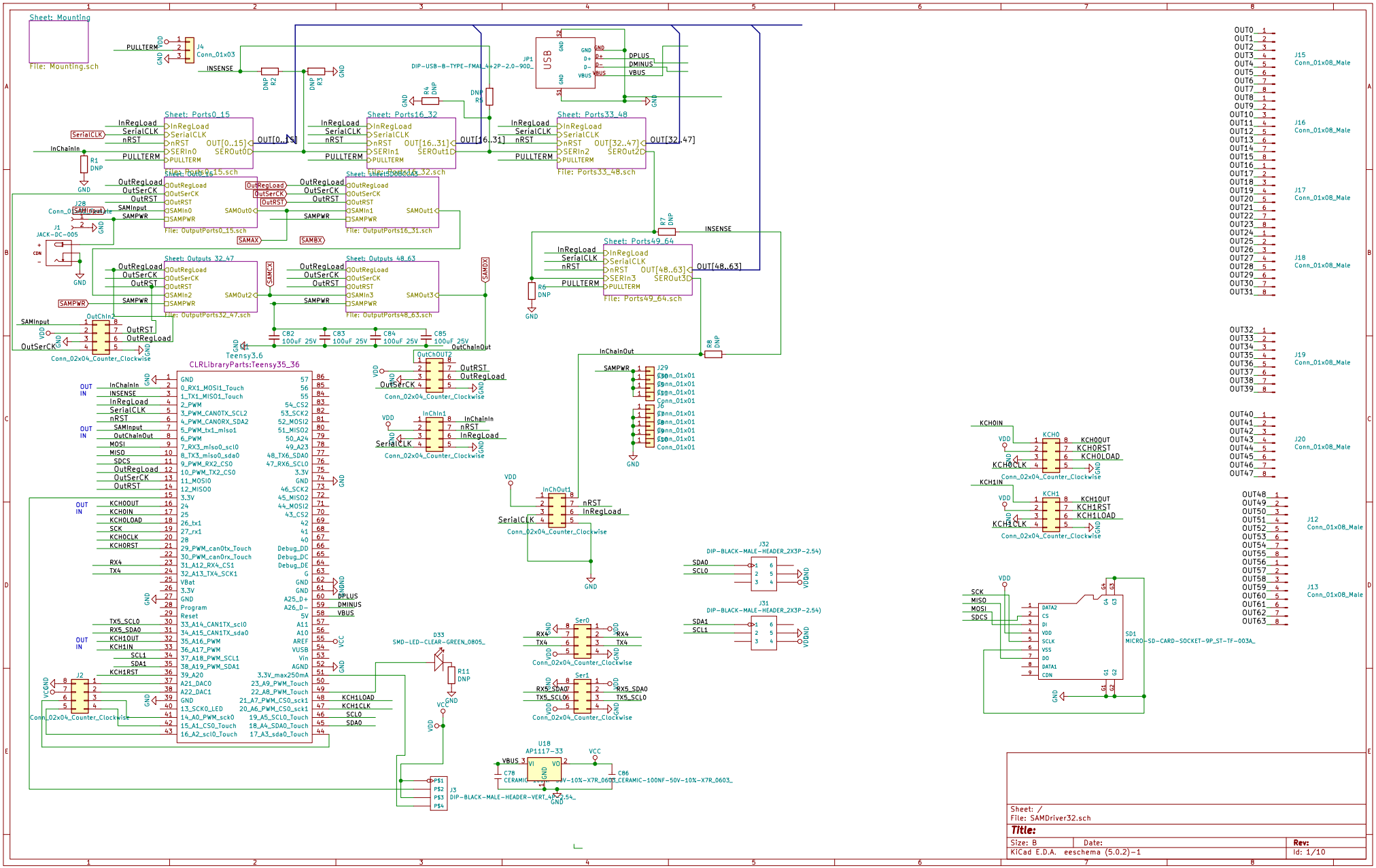
Sheet: Mounting
File: Mounting.sch
Sheet: Ports0_15
File: Ports0_15.sch
Sheet: Ports16_32
File: Ports16_32.sch
Sheet: Ports33_48
File: Ports33_48.sch
Sheet: Ports49_64
File: Ports49_64.sch
File: OutputPorts0_15.sch
File: OutputPorts16_31.sch
File: OutputPorts32_47.sch
File: OutputPorts48_63.sch
Sheet: Outputs 32_47
Sheet: Outputs 48_63
CLRLibraryParts:Teensy35_36
Teensy3.6
Conn_02x04_Counter_Clockwise
DIP-USB-B-TYPE-FMAL_4+2P-2.0-90D_
DIP-BLACK-MALE-HEADER_2X3P-2.54)
SMD-LED-CLEAR-GREEN-0805_
AP1117-33
MICRO-SD-CARD-SOCKET-9P_ST-TF-003A_
DIP-BLACK-MALE-HEADER-VERT-4P-2.54_
Conn_01x08_Male
Sheet: /
File: SAMDriver32.sch
Title:
Size: B
Date:
Rev:
KiCad E.D.A. eeschema (5.0.2)-1
Id: 1/10

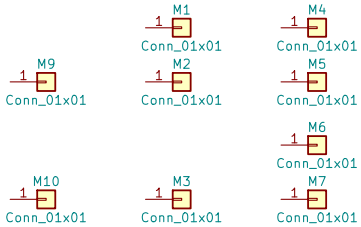

Sheet: /Mounting/
File: Mounting.sch

Title:

Size: A4	Date:	**Rev:**
KiCad E.D.A. eeschema (5.0.2)-1		Id: 2/10

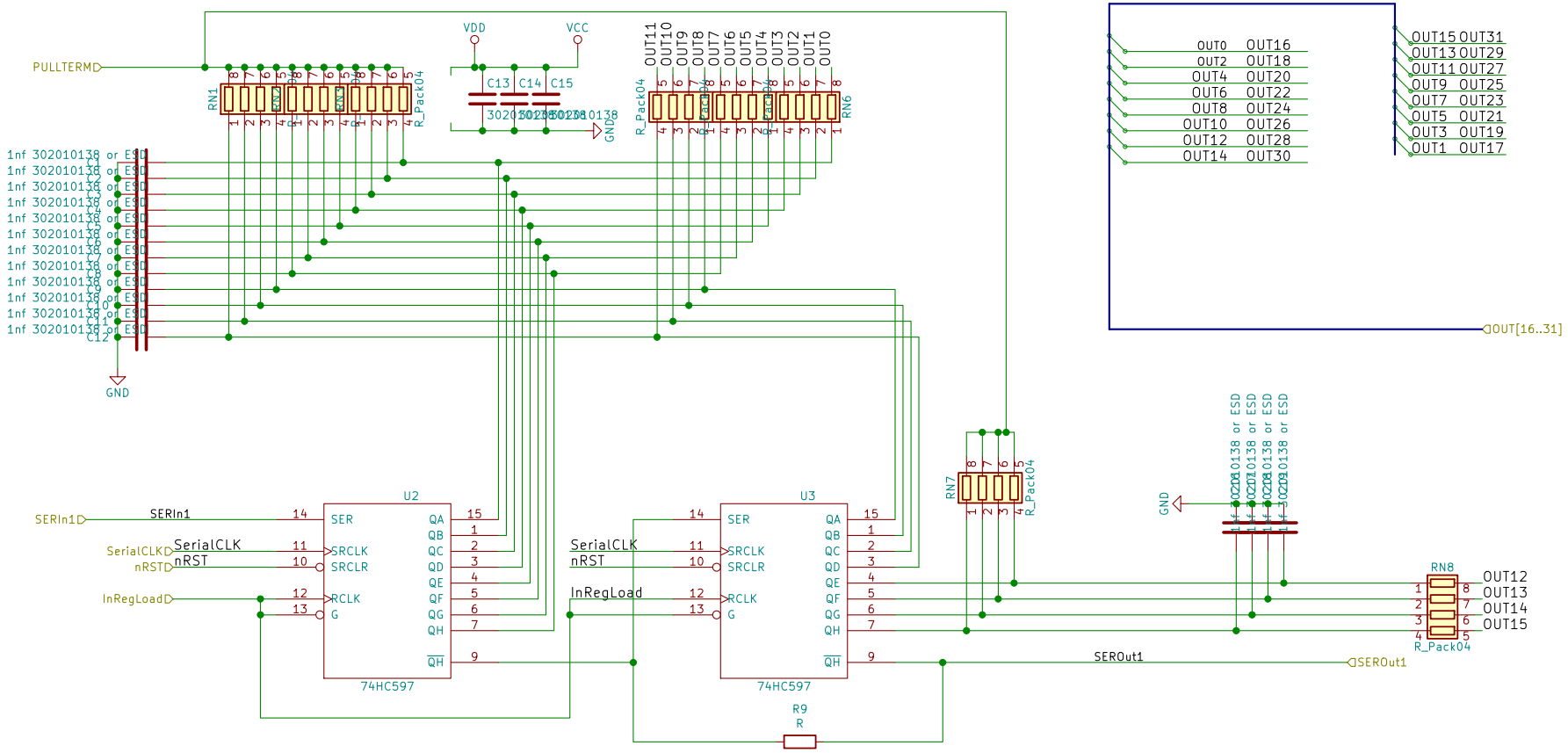

Sheet: /Ports16_32/
File: Ports16_32.sch

Title:

Size: A4	Date:	Rev:
KiCad E.D.A. eeschema (5.0.2)-1		Id: 3/10

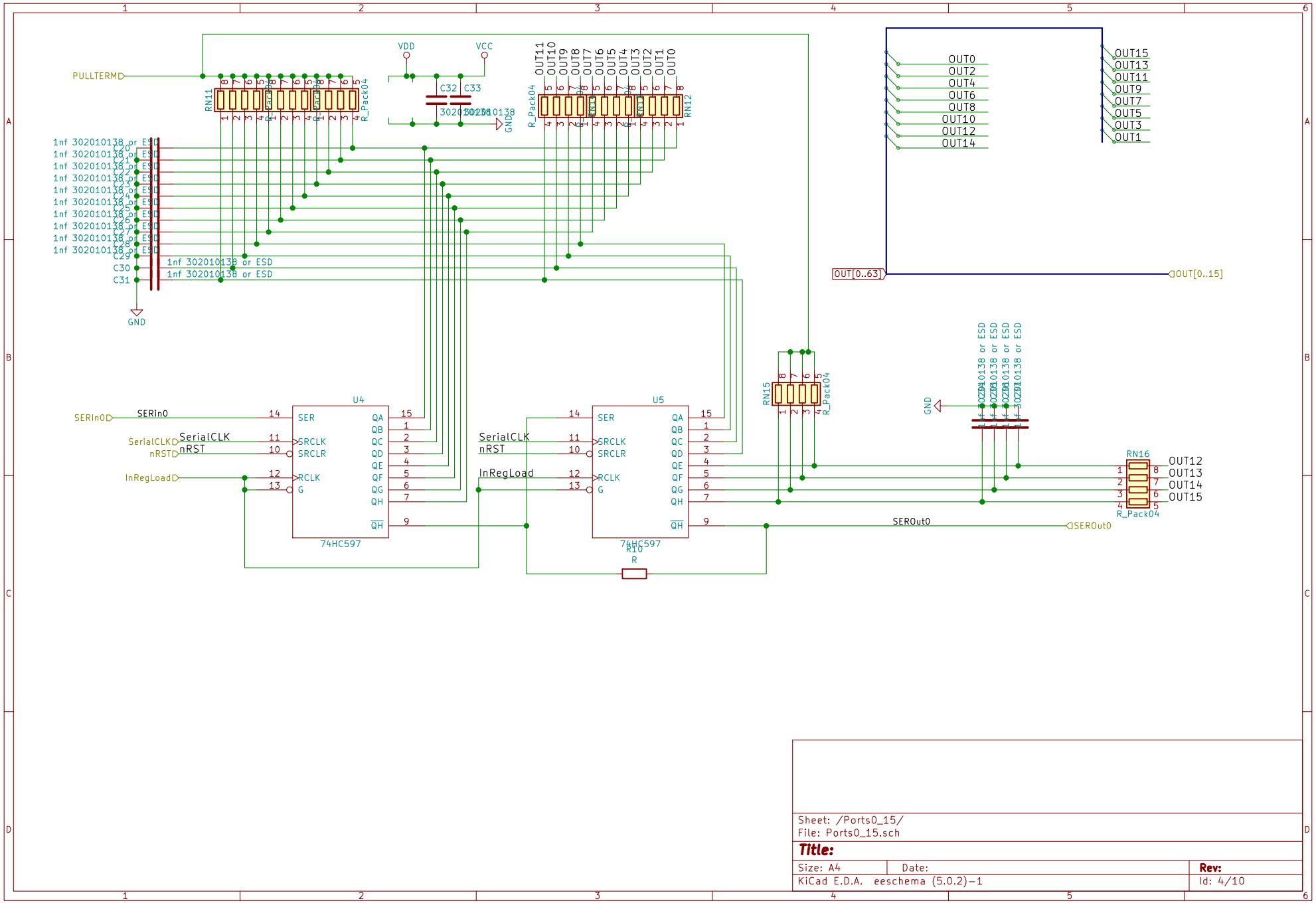

Sheet: /Ports0_15/
File: Ports0_15.sch

Title:

Size: A4	Date:	Rev:
KiCad E.D.A. eeschema (5.0.2)-1		Id: 4/10

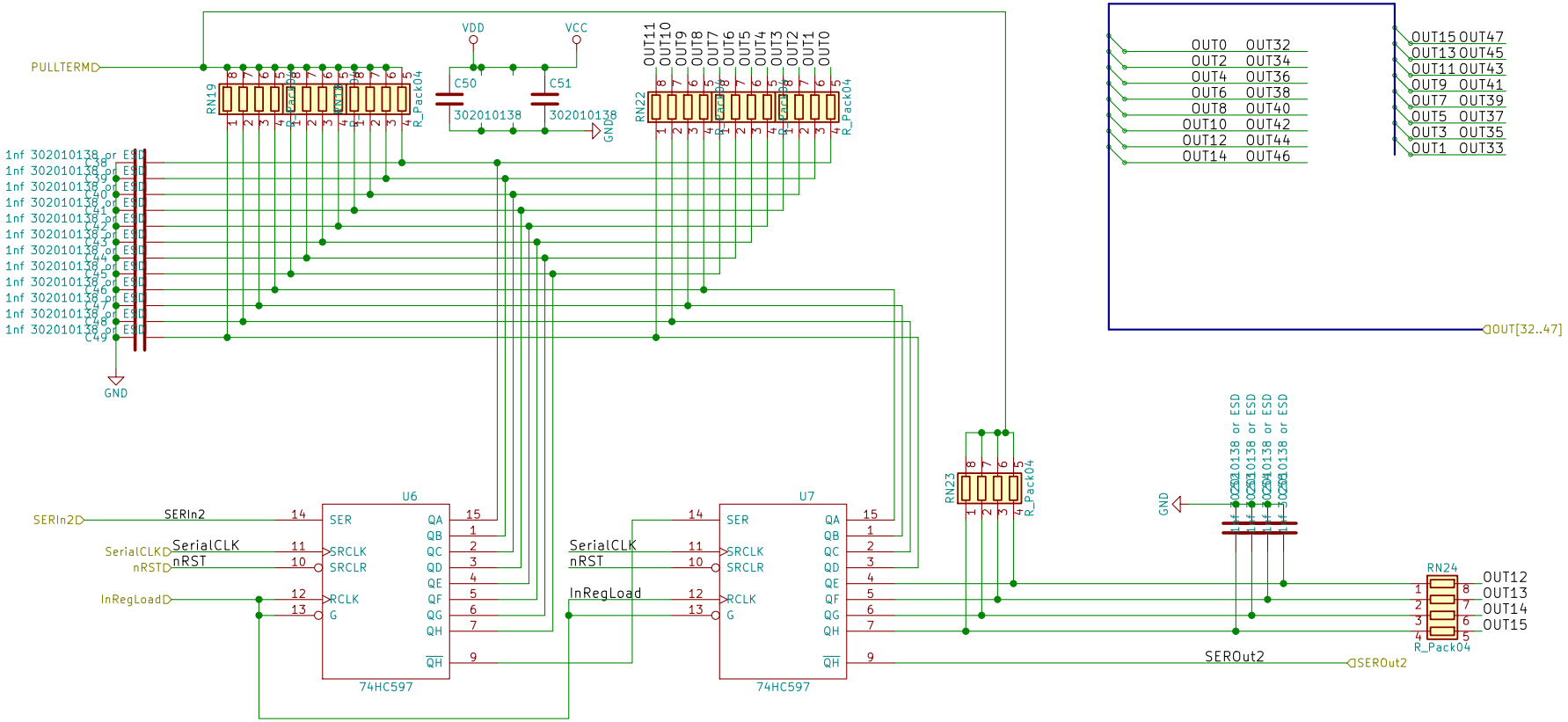

Sheet: /Ports33_48/
File: Ports33_48.sch

Title:

Size: A4	Date:	Rev:
KiCad E.D.A. eeschema (5.0.2)-1		Id: 5/10

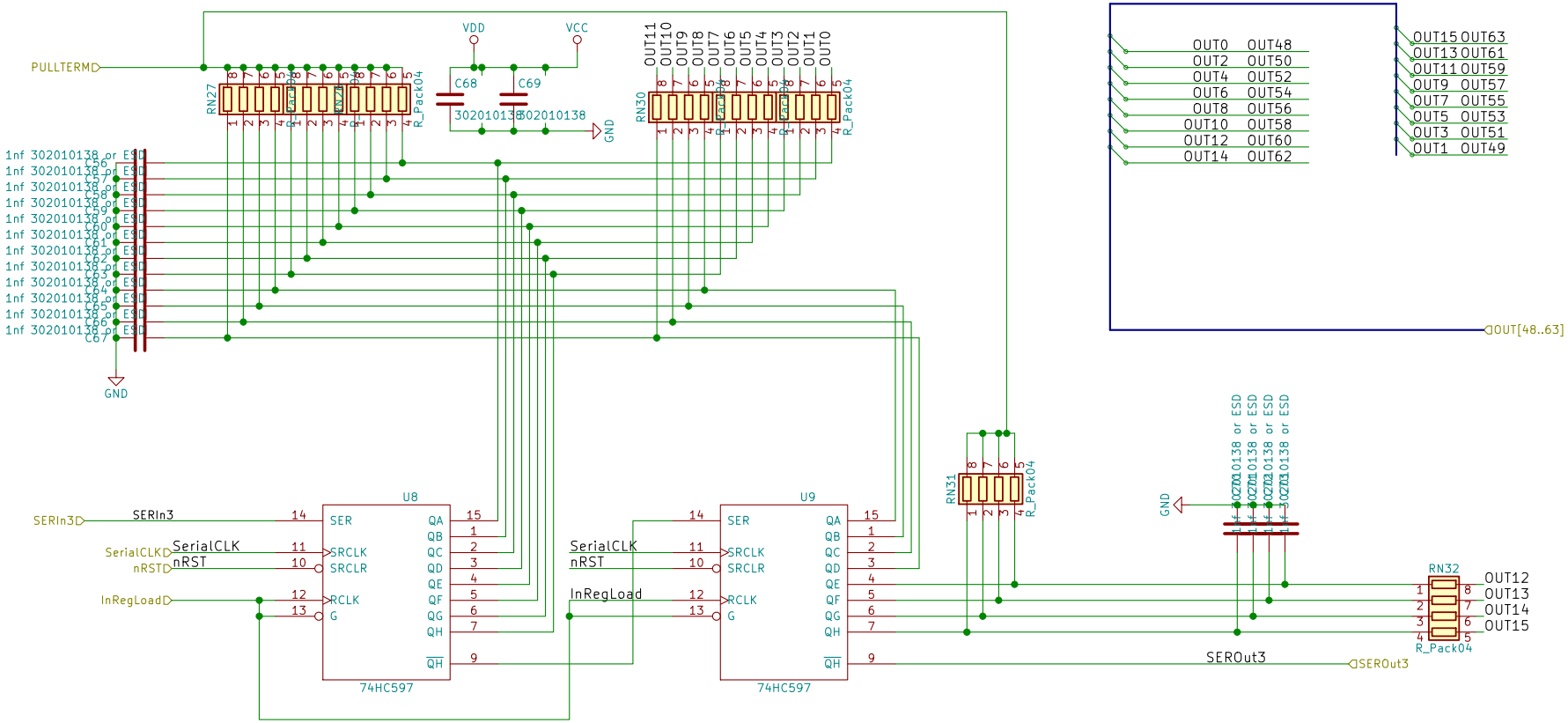

Sheet: /Ports49_64/
File: Ports49_64.sch

Title:

Size: A4	Date:	Rev:
KiCad E.D.A. eeschema (5.0.2)-1		Id: 6/10

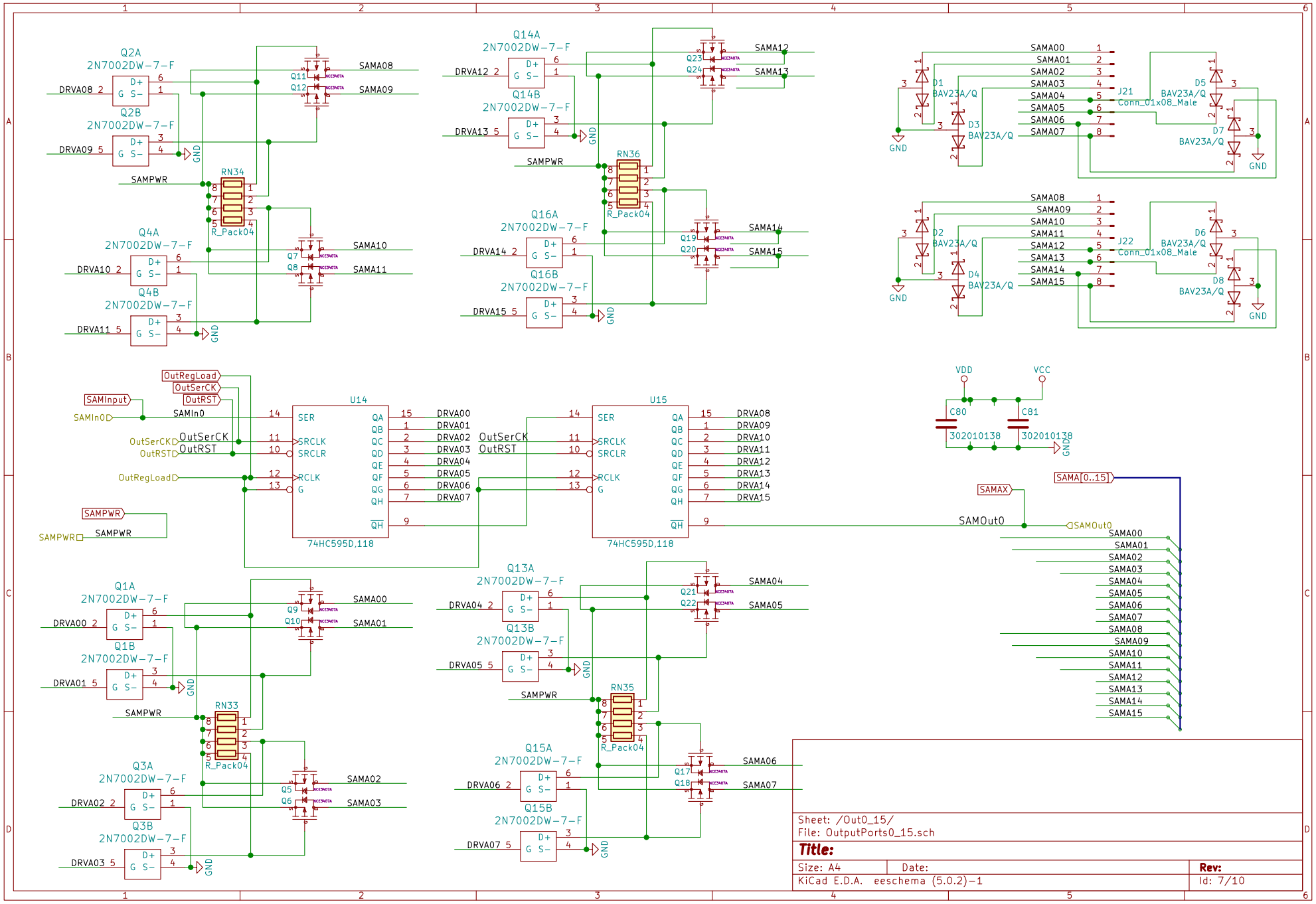
Q2A
2N7002DW-7-F
Q2B
2N7002DW-7-F
Q4A
2N7002DW-7-F
Q4B
2N7002DW-7-F
Q14A
2N7002DW-7-F
Q14B
2N7002DW-7-F
Q16A
2N7002DW-7-F
Q16B
2N7002DW-7-F
RN34
RN36
R_Pack04
SAMA08
SAMA09
SAMA10
SAMA11
SAMA12
SAMA13
SAMA14
SAMA15
SAMPWR
GND
J21
J22
Conn_01x08_Male
D1
D2
D3
D4
D5
D6
D7
D8
BAV23A/Q
U14
U15
74HC595D,118
OutRegLoad
OutSerCK
OutRST
SAMInput
SAMIn0
DRVA00
DRVA01
DRVA02
DRVA03
DRVA04
DRVA05
DRVA06
DRVA07
DRVA08
DRVA09
DRVA10
DRVA11
DRVA12
DRVA13
DRVA14
DRVA15
VDD
VCC
C80
C81
302010138
SAMAX
SAMOut0
SAMA[0..15]
Q1A
2N7002DW-7-F
Q1B
2N7002DW-7-F
Q3A
2N7002DW-7-F
Q3B
2N7002DW-7-F
Q13A
2N7002DW-7-F
Q13B
2N7002DW-7-F
Q15A
2N7002DW-7-F
Q15B
2N7002DW-7-F
RN33
RN35
SAMA00
SAMA01
SAMA02
SAMA03
SAMA04
SAMA05
SAMA06
SAMA07
Sheet: /Out0_15/
File: OutputPorts0_15.sch
Title:
Size: A4
Date:
Rev:
KiCad E.D.A. eeschema (5.0.2)-1
Id: 7/10

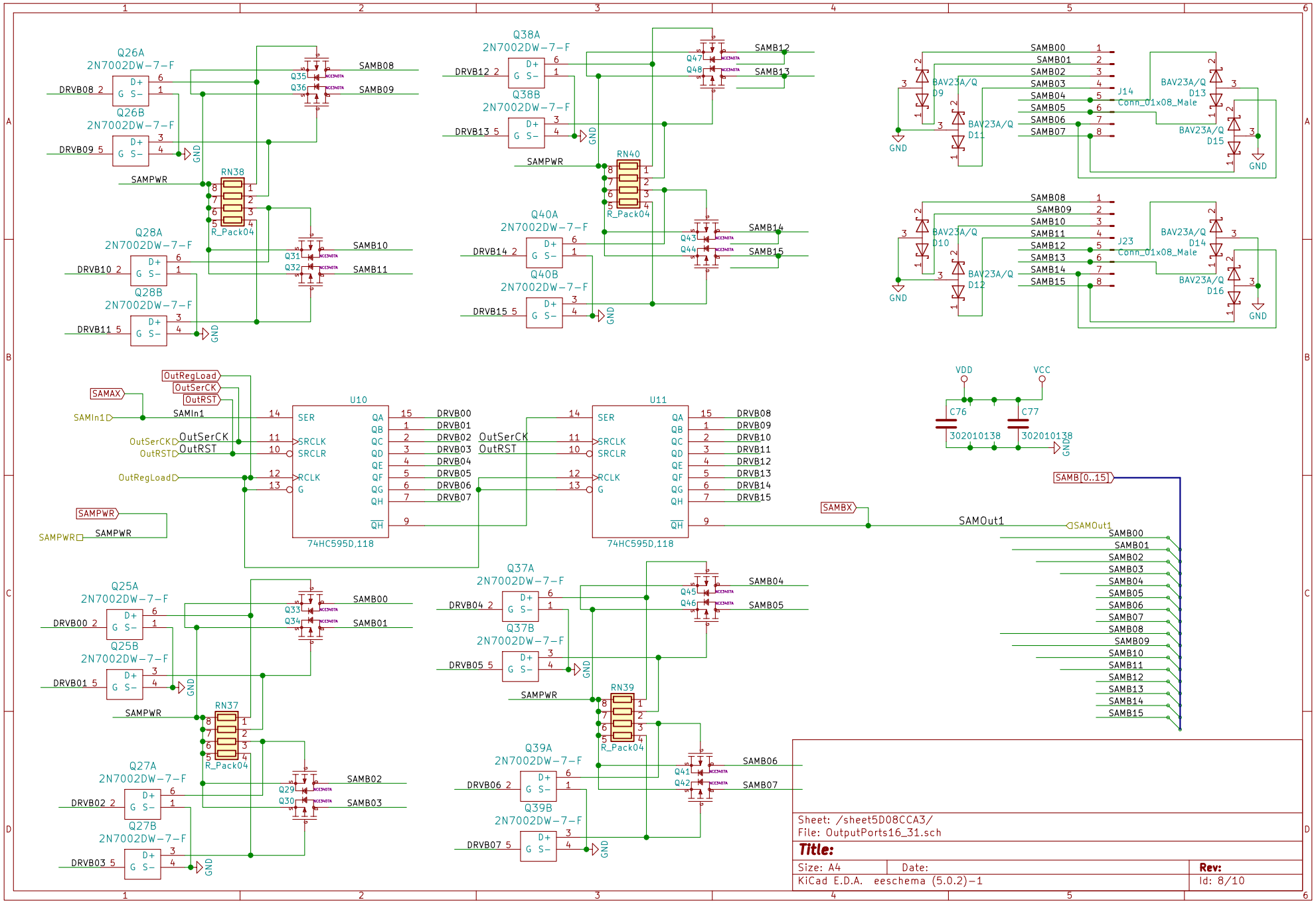

Sheet: /sheet5D08CCA3/
File: OutputPorts16_31.sch

Title:

Size: A4	Date:	Rev:
KiCad E.D.A. eeschema (5.0.2)-1		Id: 8/10

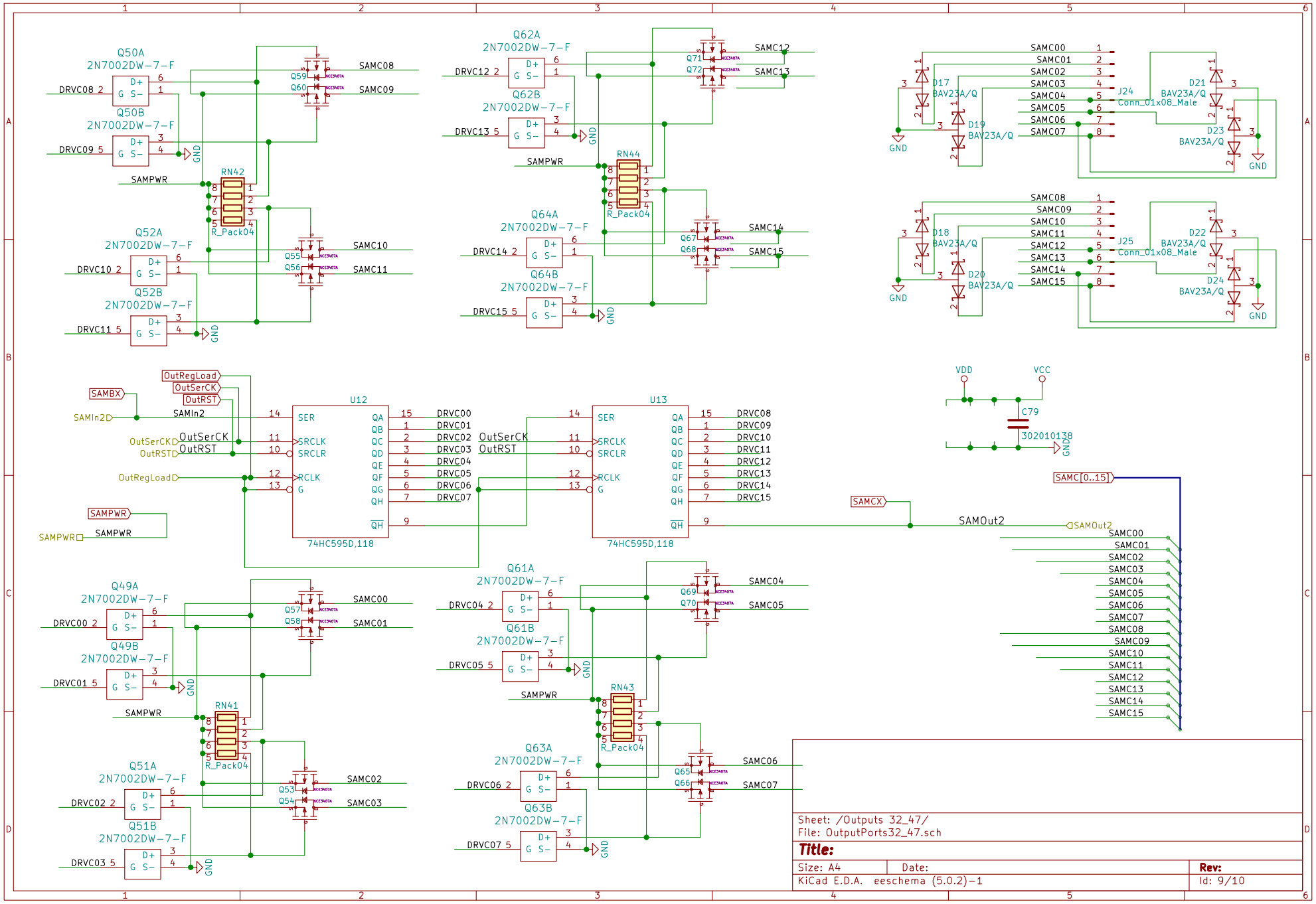

Sheet: /Outputs 32_47/
File: OutputPorts32_47.sch

Title:

Size: A4	Date:	Rev:
KiCad E.D.A. eeschema (5.0.2)-1		Id: 9/10

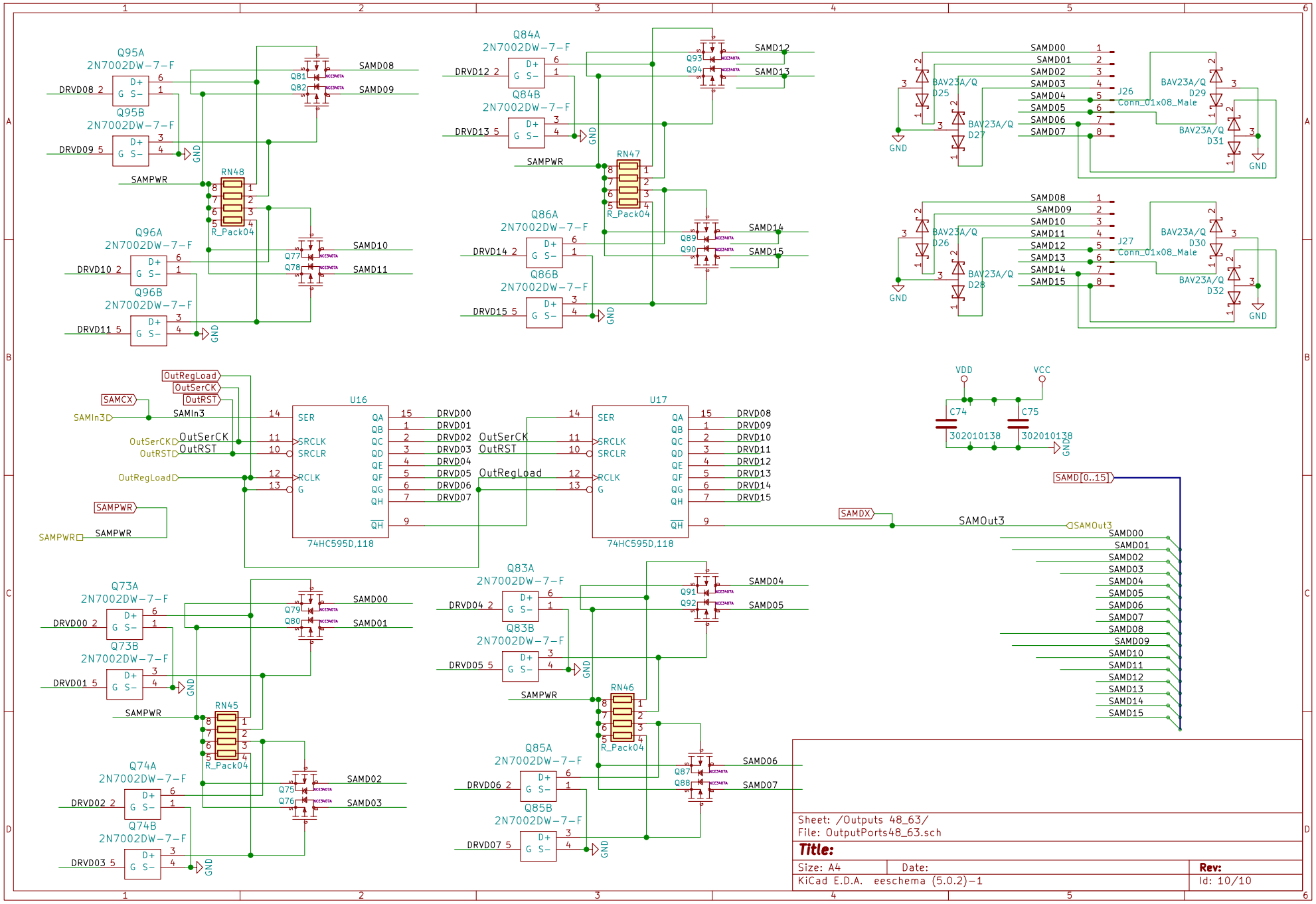

Sheet: /Outputs 48_63/
File: OutputPorts48_63.sch

Title:

Size: A4	Date:	Rev:
KiCad E.D.A. eeschema (5.0.2)-1		Id: 10/10